AIWA

LCX330

MODEL

SERVICE MANUAL

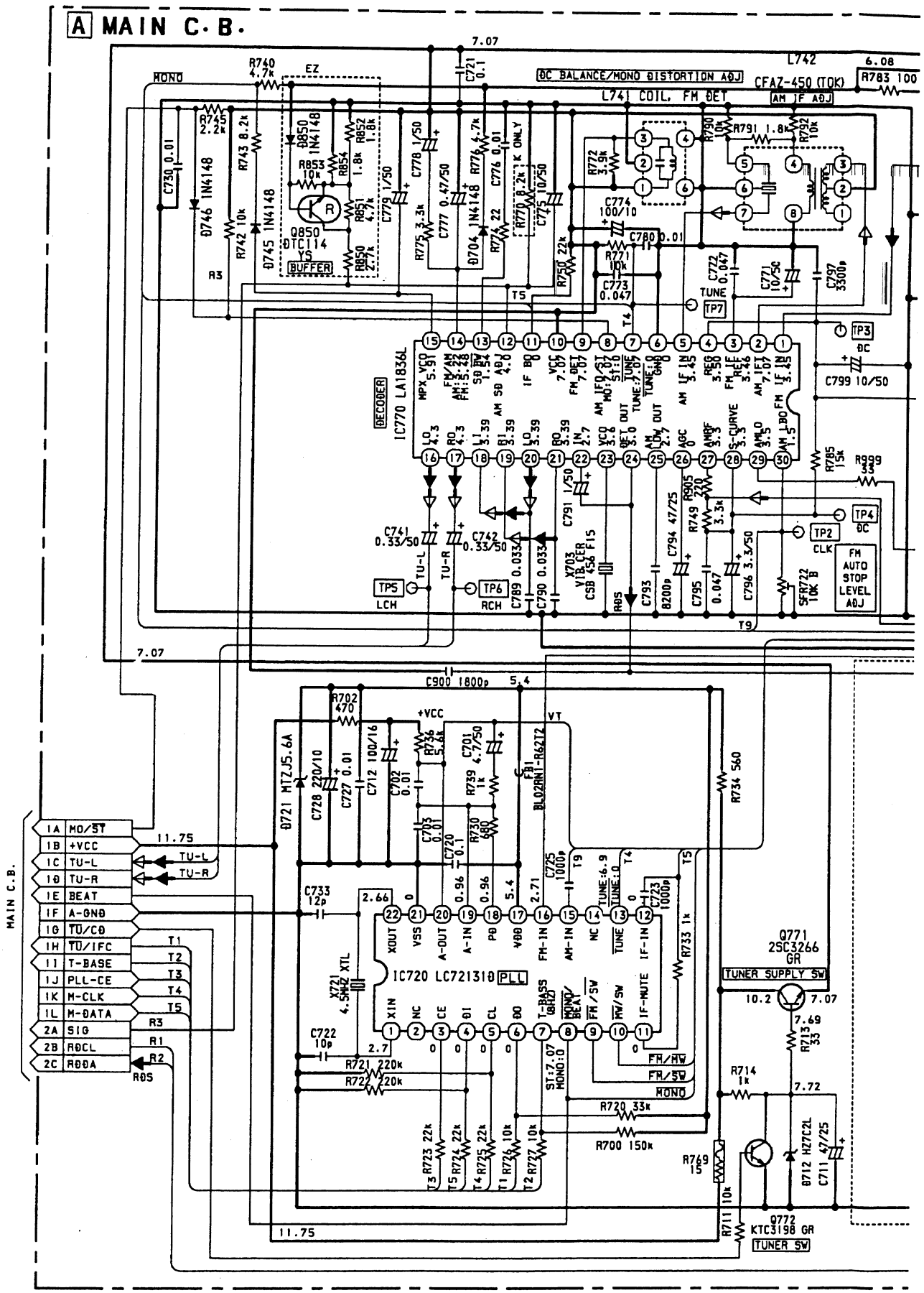
A MAIN C.B.
MONO
EZ
DC BALANCE/MONO DISTORTION ADJ
L741 COIL, FM DET
L742
CFAZ-450 (TOK)
AM IF ADJ
Q850 DTC114 YS
BUFFER
DECODER
IC770 LA1836L
TUNE
TP7
TP3
DC
TP4
DC
TP2
CLK
FM AUTO STOP LEVEL ADJ
TP5
LCH
TP6
RCH
X703 VIB. CER CSB 456 F15
RDS
C900 1800p
+VCC
VT
D721 MTZJ5.6A
FB1 BL02RN1-R62T2
IC720 LC721310 PLL
X721 4.5MHZ XTL
Q771 2SC3266 GR
TUNER SUPPLY SW
Q772 KTC3198 GR
TUNER SW
MAIN C.B.
1A MO/ST
1B +VCC
1C TU-L
1D TU-R
1E BEAT
1F A-GND
1G TU/CD
1H TU/IFC
1I T-BASE
1J PLL-CE
1K M-CLK
1L M-DATA
2A SIG
2B RDCL
2C RDDA
11.75
7.07
6.08
5.4
10.2
7.69
7.72
2.66
2.7

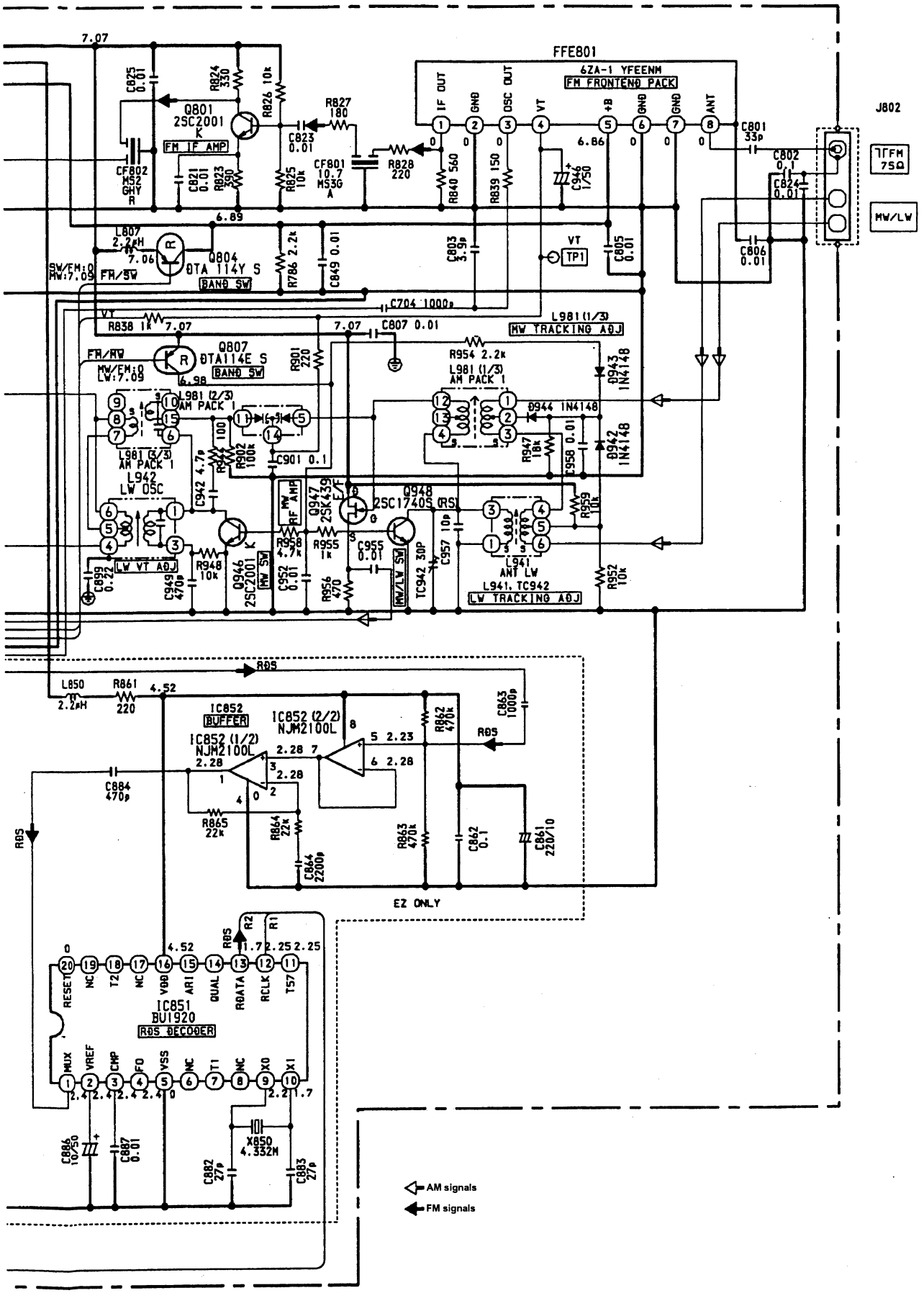
FFE801
6ZA-1 YFEENM
FM FRONTEND PACK
IF OUT
GND
OSC OUT
VT
+B
GND
GND
ANT
J802
FM 75Ω
MW/LW
Q801
2SC2001
K
FM IF AMP
CF802
MS2
GHY
R
CF801
10.7
MS3G
A
Q804
DTA 114Y S
BAND SW
SW/FM:0
MW:7.09
FM/SW
Q807
DTA114E S
BAND SW
FM/MW
MW/FM:0
LW:7.09
L981 (1/3)
MW TRACKING ADJ
L981 (1/3)
AM PACK 1
L981 (2/3)
AM PACK 1
L981 (3/3)
AM PACK 1
L942
LW OSC
LW VT ADJ
Q946
2SC2001
K
MW SW
Q947
2SK439
E/F
MW RF AMP
Q948
2SC1740S (RS)
MW/LW SW
TC942 30P
L941
ANT LW
L941, TC942
LW TRACKING ADJ
D943
1N4148
D944 1N4148
D942
1N4148
RDS
IC852
BUFFER
IC852 (1/2)
NJM2100L
IC852 (2/2)
NJM2100L
EZ ONLY
IC851
BU1920
RDS DECODER
RESET
NC
T2
NC
VDD
ARI
QUAL
RDATA
RCLK
T57
MUX
VREF
CMP
FO
VSS
NC
T1
NC
XO
XI
X850
4.332M
AM signals
FM signals

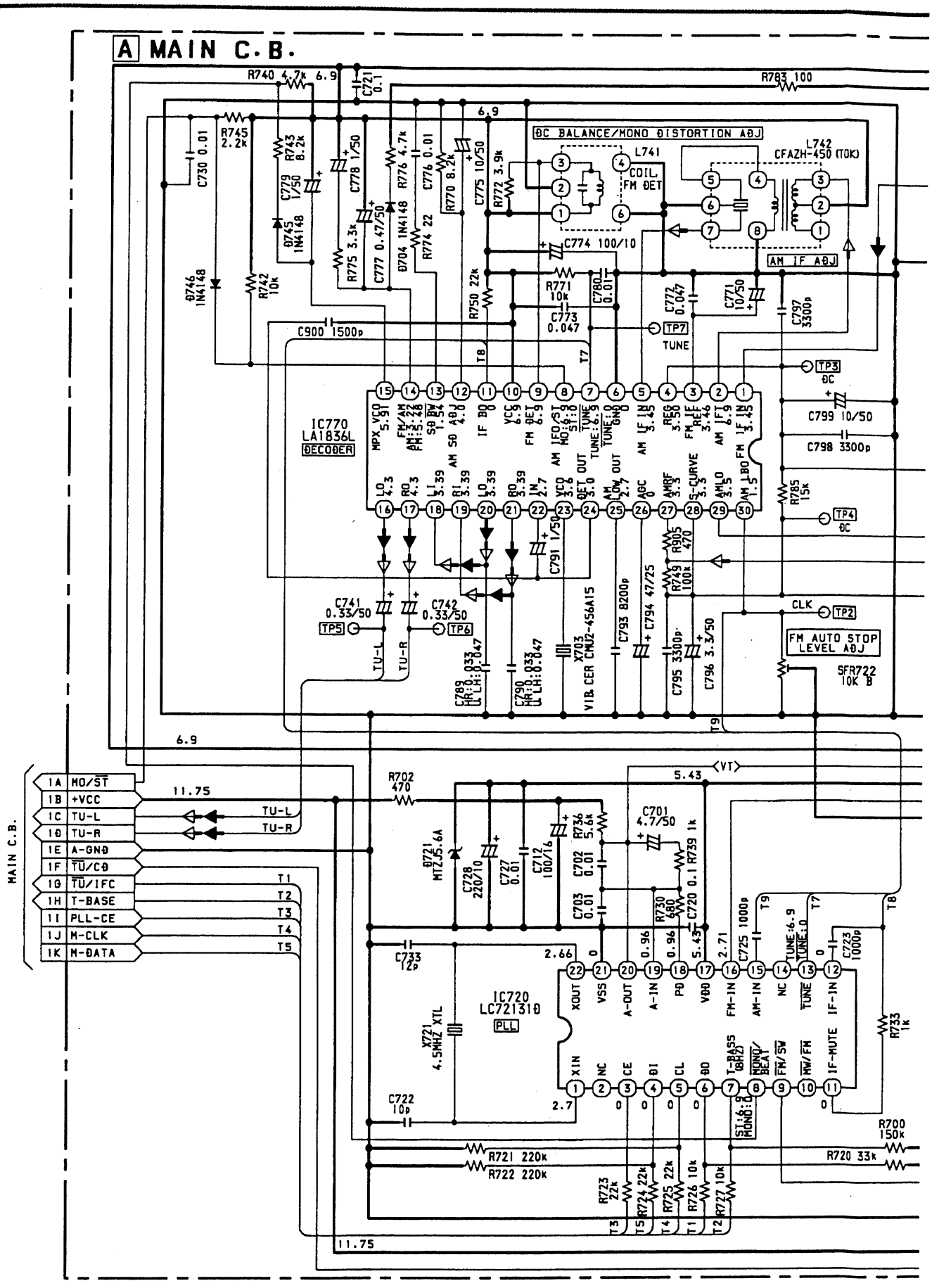
A MAIN C.B.
IC770
LA1836L
DECODER
IC720
LC72131D
PLL
DC BALANCE/MONO DISTORTION ADJ
AM IF ADJ
FM AUTO STOP LEVEL ADJ
TUNE
CLK
DC
1A MO/ST
1B +VCC
1C TU-L
1D TU-R
1E A-GND
1F TU/CD
1G TU/IFC
1H T-BASE
1I PLL-CE
1J M-CLK
1K M-DATA
MAIN C.B.
11.75
5.43
6.9
TU-L
TU-R

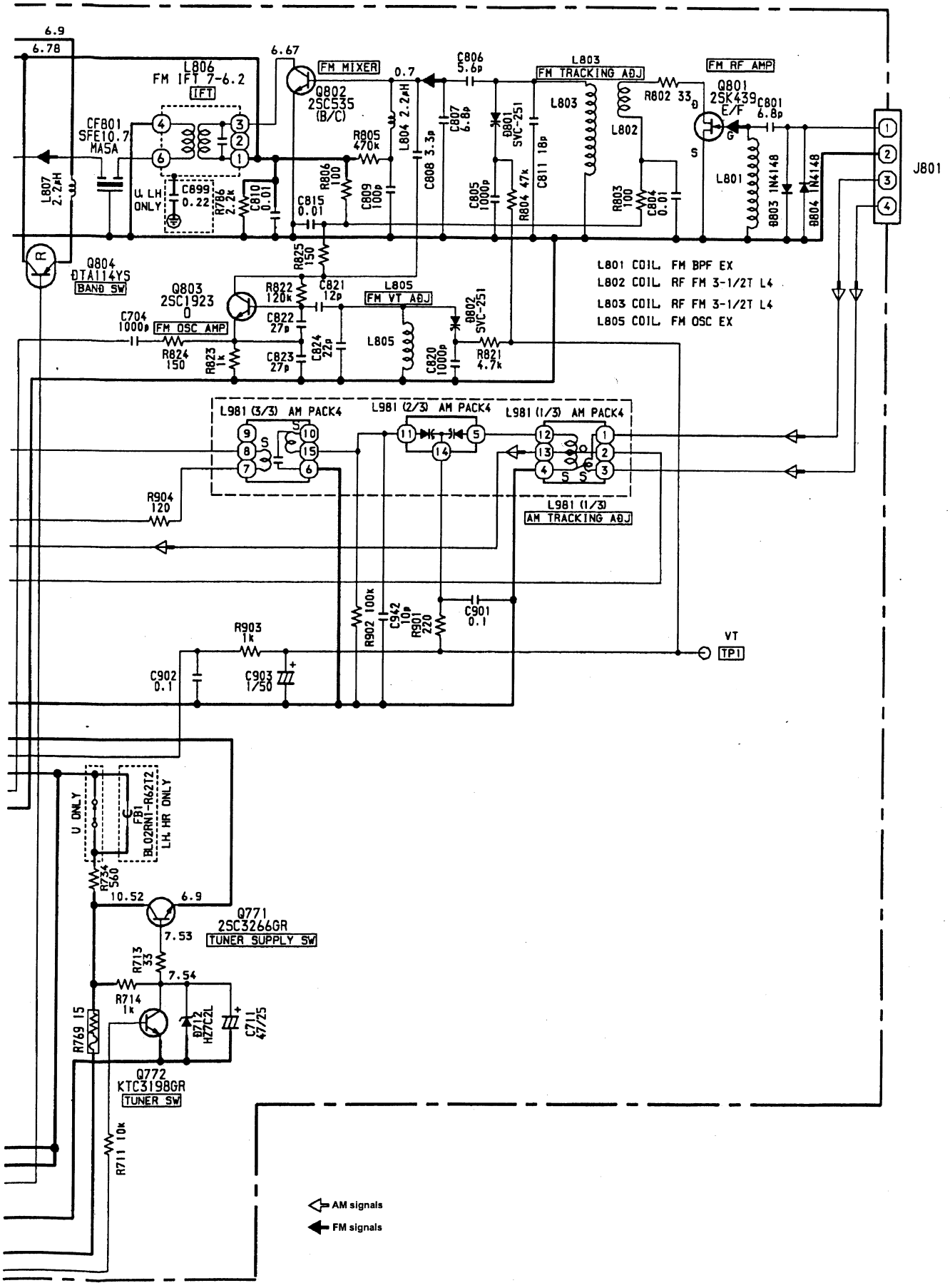
6.9
6.78
L806
FM IFT 7-6.2
IFT
6.67
FM MIXER
Q802
2SC535
(B/C)
0.7
C806
5.6p
L803
FM TRACKING ADJ
FM RF AMP
Q801
2SK439
E/F
R802 33Ω
C801
6.8p
CF801
SFE10.7
MA5A
L807
2.2μH
U, LH
ONLY
C899
0.22
R786
2.2k
C810
0.01
C815
0.01
R806
100
R805
470k
L804 2.2μH
C809
100p
C808 3.3p
C807
6.8p
D801
SVC-251
C805
1000p
R804 47k
C811 18p
L803
L802
R803
100
C804
0.01
L801
D803 1N4148
D804 1N4148
J801
Q804
DTA114YS
BAND SW
R825
150
Q803
2SC1923
O
R822
120k
C821
12p
L805
FM VT ADJ
D802
SVC-251
C704
1000p
FM OSC AMP
C822
27p
C824
22p
C823
27p
R824
150
R823
1k
L805
C820
10000p
R821
4.7k
L801 COIL, FM BPF EX
L802 COIL, RF FM 3-1/2T L4
L803 COIL, RF FM 3-1/2T L4
L805 COIL, FM OSC EX
L981 (3/3) AM PACK4
L981 (2/3) AM PACK4
L981 (1/3) AM PACK4
L981 (1/3)
AM TRACKING ADJ
R904
120
R902 100k
C942
10p
R901
220
C901
0.1
R903
1k
C902
0.1
C903
1/50
VT
TP1
U ONLY
FB1
BL02RN1-R62T2
L.H. HR ONLY
R734
560
10.52
6.9
Q771
2SC3266GR
TUNER SUPPLY SW
7.53
R713
33
7.54
R714
1k
R769 15
D712
HZ7C2L
C711
47/25
Q772
KTC3198GR
TUNER SW
R711 10k
AM signals
FM signals

AIWA LCX-330

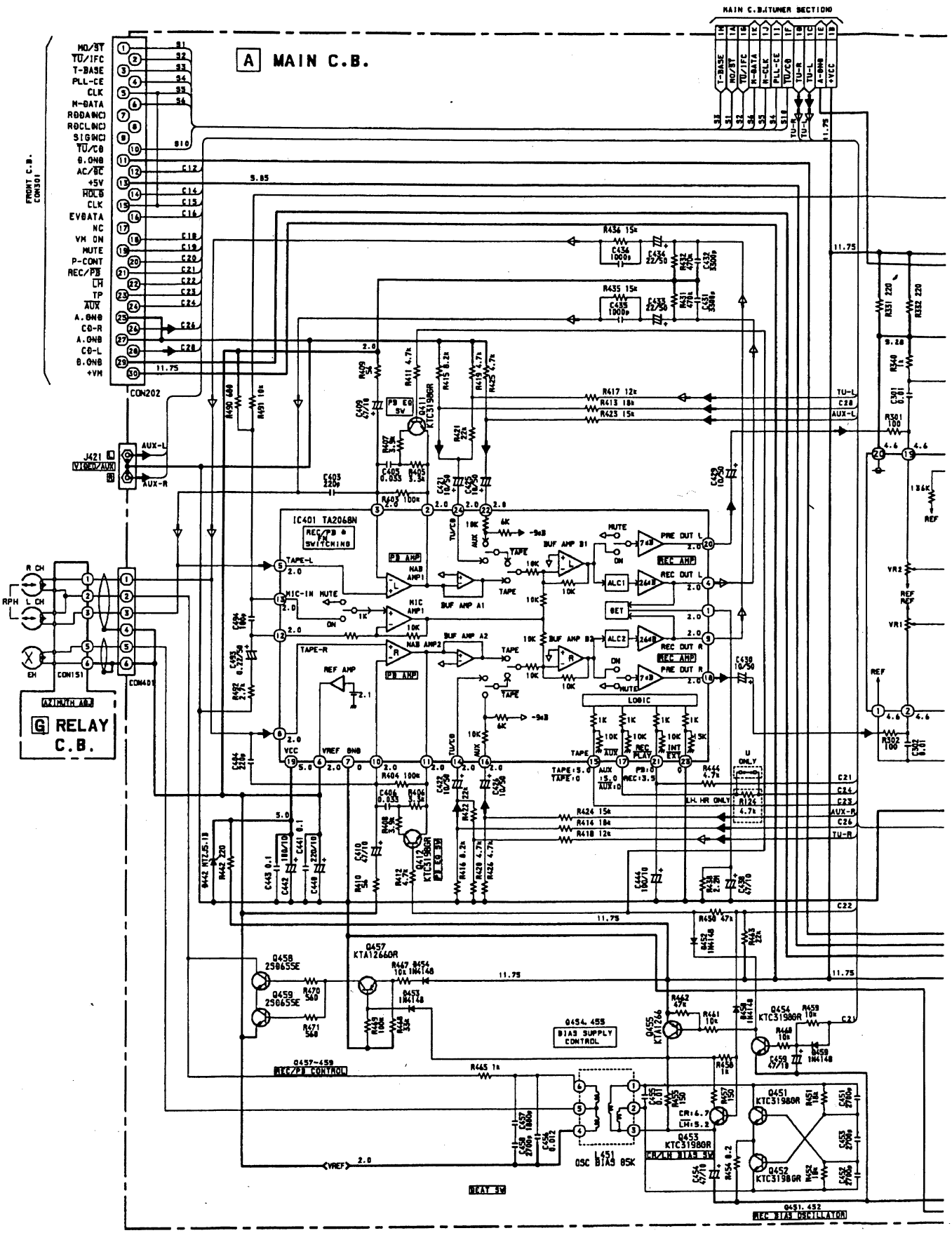

A MAIN C.B.
MAIN C.B.(TUNER SECTION)
FRONT C.B. CON301
CON202
J421
IC401 TA2068N
REC/PB & FM SWITCHING
PB AMP
REC AMP
LOGIC
G RELAY C.B.
CON151
CON401
AZIMUTH ADJ
Q457 KTA1266GR
Q458 2SD655E
Q459 2SD655E
Q454.455 BIAS SUPPLY CONTROL
Q457-459 REC/PB CONTROL
L451 OSC BIAS 85K
Q451.452 REC BIAS OSCILLATOR
Q453 KTC3198GR
Q451 KTC3198GR
Q452 KTC3198GR
Q454 KTC3198GR
Q455 KTA1266
Q411 KTC3198GR
Q412 KTC3198GR
BEAT SW

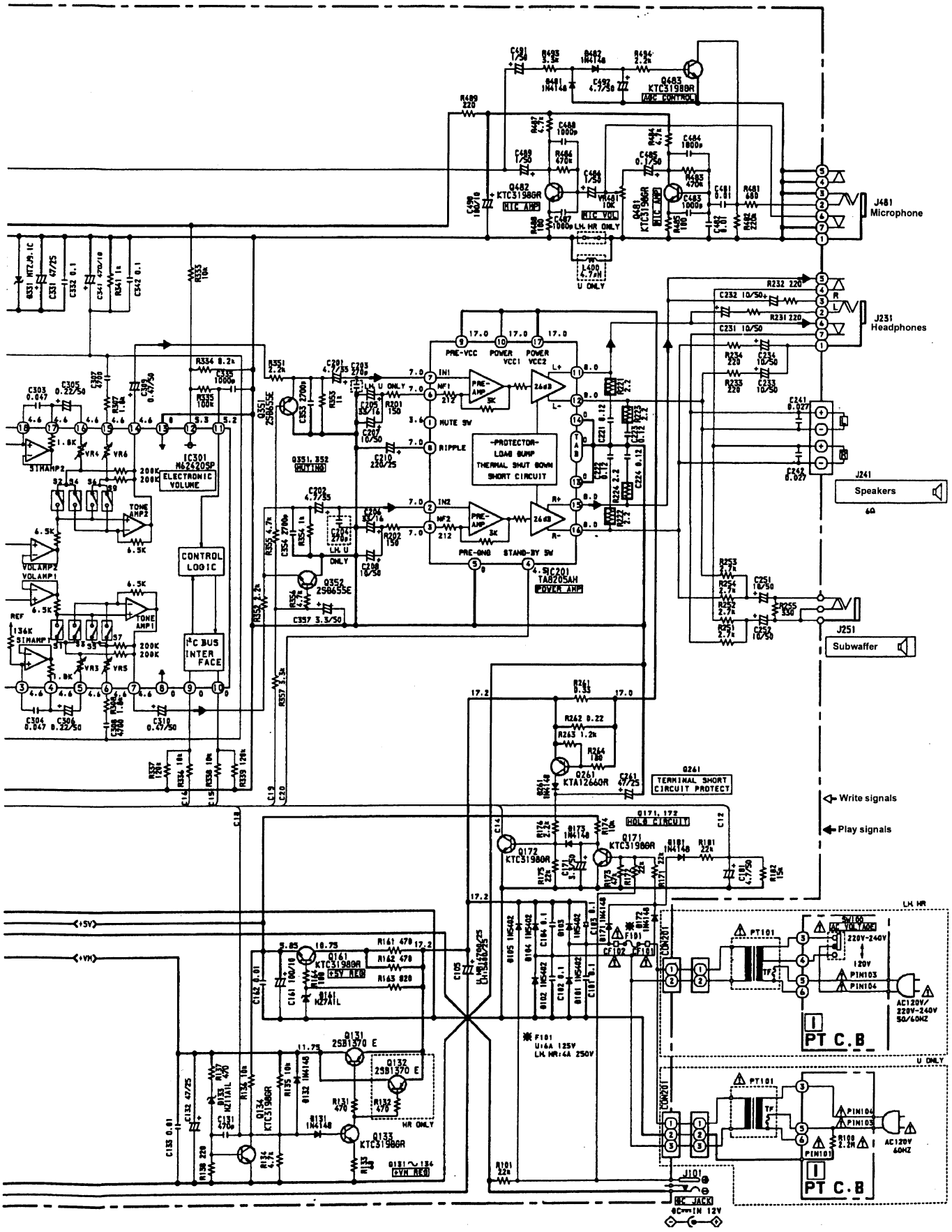
J481
Microphone
J231
Headphones
J241
Speakers
J251
Subwaffer
Write signals
Play signals
-PROTECTOR-
LOAD SUMP
THERMAL SHUT DOWN
SHORT CIRCUIT
IC301
M62420SP
ELECTRONIC VOLUME
CONTROL LOGIC
I²C BUS INTER FACE
IC201
TA8205AH
POWER AMP
Q261
TERMINAL SHORT CIRCUIT PROTECT
Q171, 172
HOLD CIRCUIT
Q483
KTC3198GR
AGC CONTROL
Q482
KTC3198GR
MIC AMP
Q481
KTC3198GR
MIC AMP
MIC VOL
Q352
2SB655E
Q351, 352
MUTING
Q161
KTC3198GR
+5V REG
Q131
2SB1370 E
Q132
2SB1370 E
Q133
KTC3198GR
+VM REG
Q134
KTC3198GR
Q172
KTC3198GR
Q171
KTC3198GR
Q261
KTA1266GR
PT C.B
PT C.B
AC120V/
220V-240V
50/60HZ
AC120V
60HZ
J101
DC JACK
DC IN 12V
+5V
+VM
LH HR
U ONLY
HR ONLY

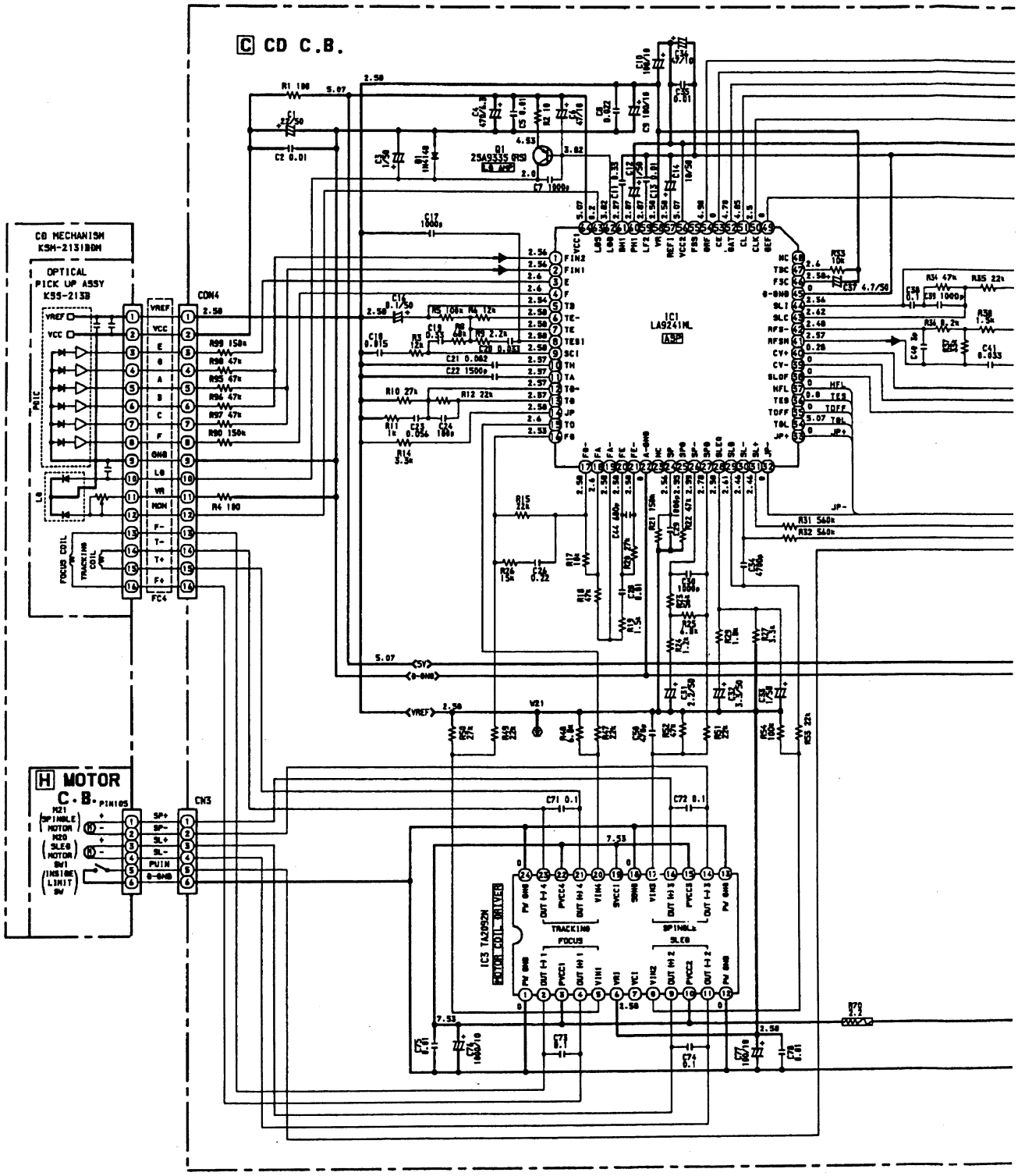
C CD C.B.
CD MECHANISM
KSM-213BBM
OPTICAL
PICK UP ASSY
KSS-213B
CON4
FC4
H MOTOR
C.B.
CN3
IC1
LA9241ML
IC3 TA2092N
MOTOR COIL DRIVER
TRACKING
FOCUS
SPINDLE
SLED

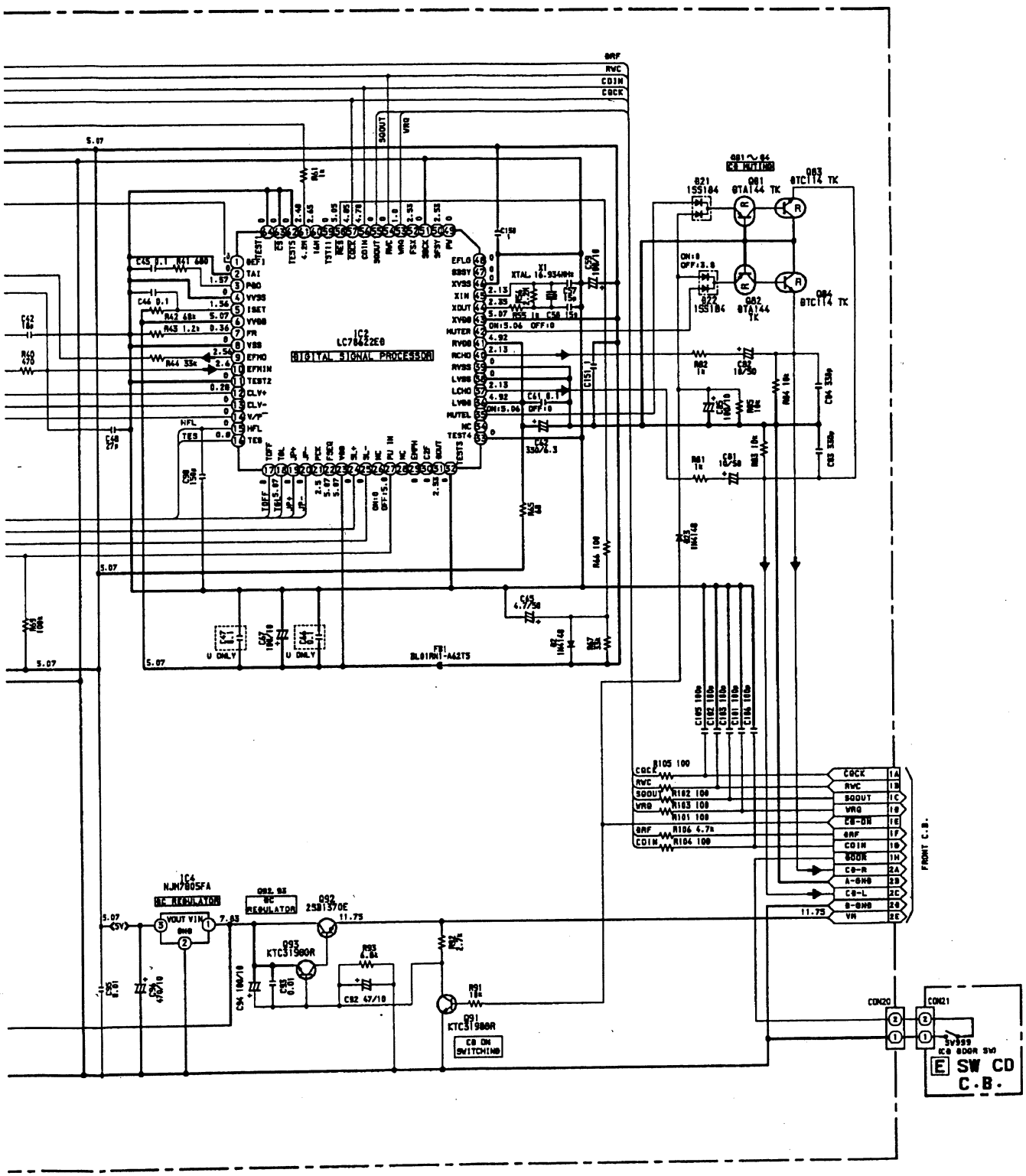
IC2
LC78622E0
DIGITAL SIGNAL PROCESSOR
IC4
NJM7805FA
DC REGULATOR
Q92
2SB1370E
Q93
KTC3198OR
Q91
KTC3198OR
CD ON SWITCHING
FRONT C.B.
CON20
CON21
SW CD
C.B.

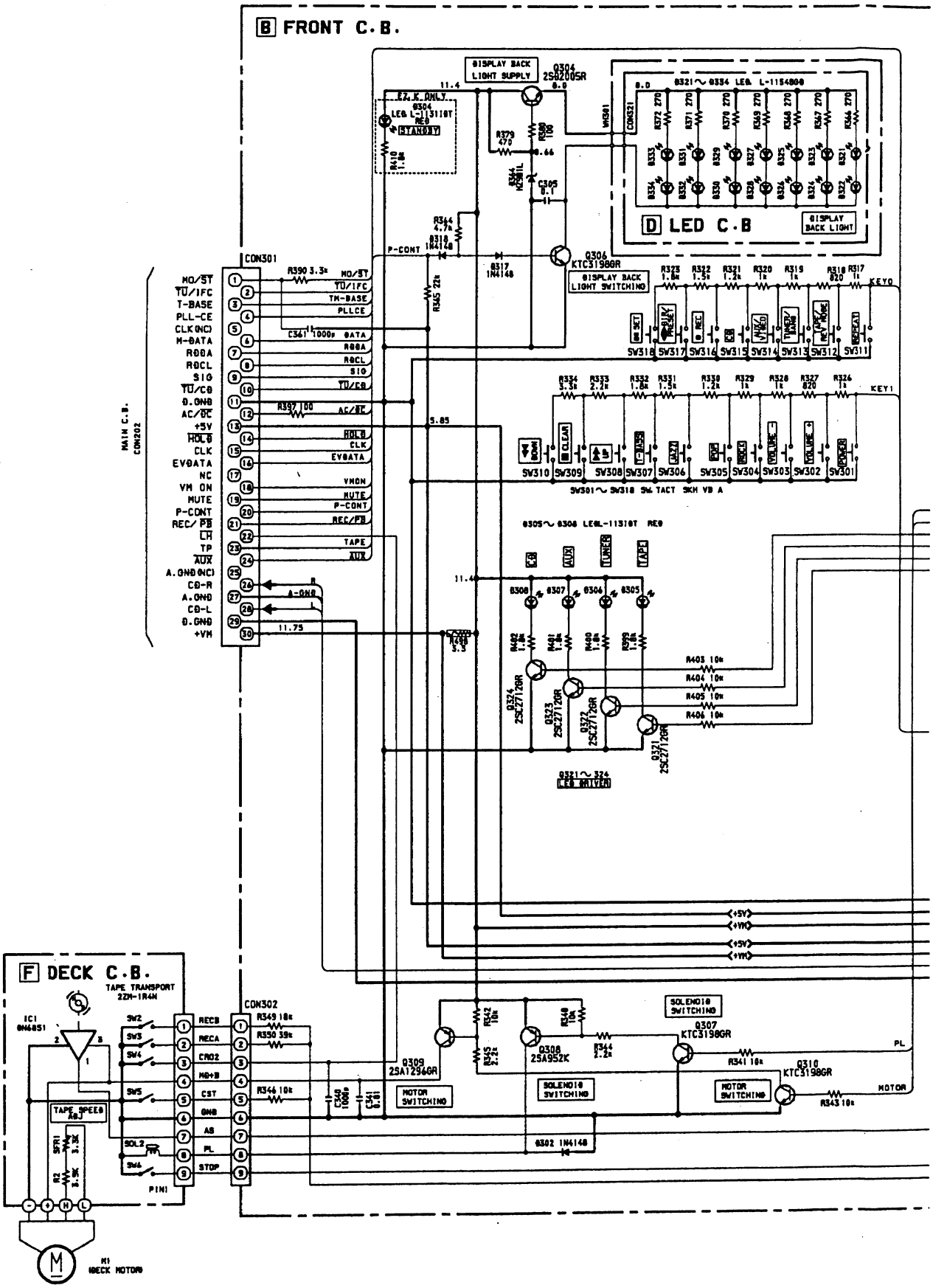
B FRONT C.B.
D LED C.B
F DECK C.B.
CON301
CON302
MAIN C.B.
CON202
DISPLAY BACK LIGHT SUPPLY
DISPLAY BACK LIGHT SWITCHING
SOLENOID SWITCHING
MOTOR SWITCHING
TAPE TRANSPORT 2ZM-1R4N
TAPE SPEED ADJ
M1 (DECK MOTOR)
Q304 2SD2005R
Q306 KTC3198GR
Q307 KTC3198GR
Q308 2SA952K
Q309 2SA1296GR
Q310 KTC3198GR
Q321~324 LED DRIVER
SW301~SW318 SW TACT SKH VB A
KEY0
KEY1

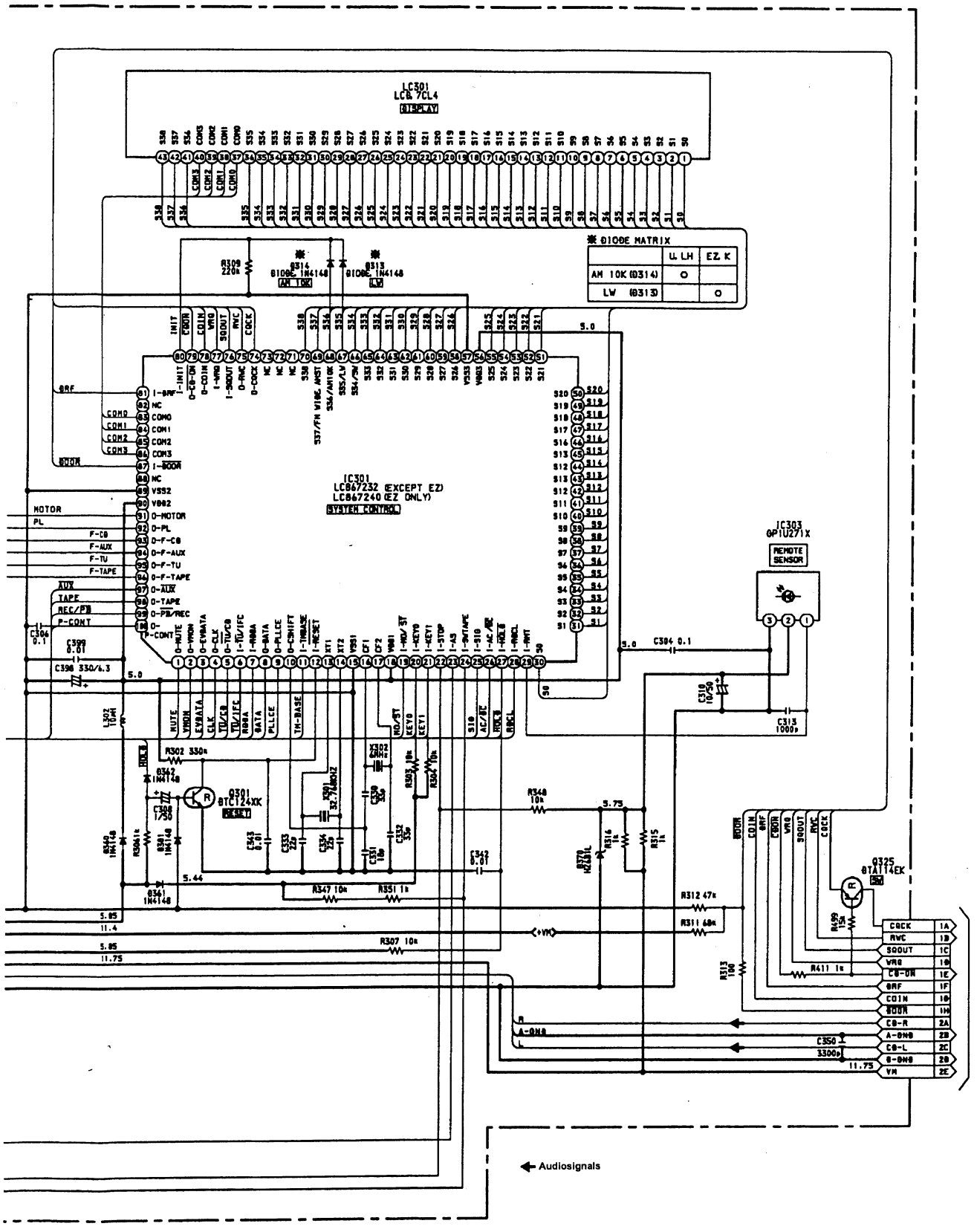

✱ DIODE MATRIX	U, LH	EZ, K
AM 10K (D314)	O	
LW (D313)		O